# CONSIDERATIONS ON CONTACTLESS INDUCTIVE PAPER MOISTURE MEASUREMENT

**Drd. Fiz. Tudor BURLAN-ROTAR,**
Polytechnic University of Bucharest, tudor.burlan@yahoo.com**,**
**Prof. Univ. Emerit Dr. Ing. Constantin D. STANESCU,**
Polytechnic University of Bucharest, prof_cstanescu@yahoo.com,
**Drd. Prof. Eng. Liliana CAINICEANU,**
Polytechnic University of Bucharest, lili_cainiceanu@yahoo.com

**ABSTRACT:** At the end of the paper production process, reducing its moisture content is achieved by passing the finished product in continuous flow through an electric oven. This paper assumes humidity control, which in turn determine the electrical conductivity of the paper.

The operating principle of non-contact method is: a transmitting coil Tx supplied with alternating current at an audio frequency is placed on the paper comes out of the oven. A reception coil Rx is located at a short distance, s, away from the Tx coil. The magnetic field varies in time and emission Tx coil induces circular currents of very low intensity in wet paper. These currents generate a secondary magnetic field Hs , which is sensed by the receiver Rx coil together with the magnetic field Hp.

The ratio of the secondary magnetic field Hs and Hp primary magnetic field (Hs \ Hp) is directly proportional to the conductivity of the paper. Thus it is possible to build a device to measure the conductivity of paper contactless electromagnetic technique.

**KEY-WORDS**: inductive, humidity, conductivity, contactless.

## 1. INTRODUCTION

At the end of the paper production process, reducing its moisture content is achieved by passing the finished product in continuous flow through an electric heater.

This paper assumes humidity control, which in turn determine the electrical conductivity of the paper.

The electromagnetic techniques for measuring soil resistivity has been known for a long time. It can be used to measure paper moisture. Conductivity is preferable in inductive techniques, as instrumentation readings are generally directly proportional to conductivity and inversely proportional to resistivity.

## 2. ELECTROMAGNETIC METHOD FOR MEASURING SOIL RESISTIVITY

The application of electromagnetic techniques for measuring soil resistivity or conductivity is known for a long time. Conductivity is preferred in inductive techniques as instrumentation readings are generally directly proportional to the conductivity and resistivity inversely proportional.

Figure 1 presents the principle of electromagnetic method for measuring soil conductivity.

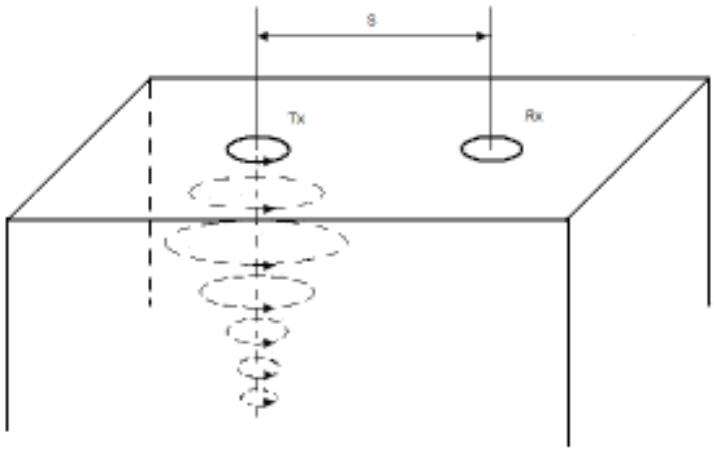


Fig. 1. Principle of electromagnetic soil conductivity measurement

The operating principle of this method is:

A Tx transmitter coil supplied with alternating current at a frequency audio is placed on the ground.

A Rx receiver coil is located at a distance s from Tx coil.

The magnetic field varies in time and the Tx coil induces very small currents in the ground. These currents generate a secondary magnetic field, Hs, which is sensed by the Rx receiver coil, together, with primary magnetic field Hp.

The current induced in the coil receiver Rx is directly proportional to the conductivity of the soil:

$$\frac{H_s}{H_p} \cong \frac{i\omega\mu_0\sigma S^2}{4} \qquad (1)$$

where :

$H_s$ = secondary magnetic field at Rx coil; $\mu_0$ = permeability of vacuum;

$H_p$ = primary magnetic field at Rx coil; $\sigma$ = soil conductivity;

$\omega$ = $2\pi f$ (pulsation); s = distance between coils;

f = frequency; i = $\sqrt{-1}$

Since the ratio of the secondary magnetic field and the primary magnetic field is directly proportional to the soil conductivity, can write apparent conductivity indicated by the instrument as defined by the equation:

$$\sigma_a = \frac{4}{\omega\mu_0 S^2}\left(\frac{H_s}{H_p}\right) \qquad (2)$$

The unit for conductivity is Siemens per meter or, more conveniently, milli Siemens per meter (mS / m).

## 3. CHARACTERISTICS OF THE DEVICE ACCORDING TO THE TYPE OF POLARIZATION

The table 1 shows the penetration depth depending on the type of polarization and the distance between the coils.

Table 1

| Distance between coils (meters) | The penetration depth (meters) | |
|---|---|---|
| | Horizontal dipole (HD) | Vertical dipole (VD) |
| 0,2 | 0,15 | 0,3 |
| 0,4 | 0,3 | 0,6 |
| 1 | 0,75 | 1,5 |

The table 1 shows the penetration depth depending on the type of polarization and the distance between the coils.

Consider the following initial conditions:

For a homogeneous or stratified horizontal ground current flow is entirely horizontal. In addition, the current flow at any point in the ground is independent of current flow at any point and the magnetic coupling between the current loops are negligible. Accordingly the depth of penetration is limited only by the distance between the coils.

The response of the device as a function of depth (in a homogeneous halfspace):

Whether on a homogeneous halfspace surface which are located the Tx and Rx coils at distance s. Consider a thin layer dz at a depth z.

The thin layer dz at a depth z is presented in figure 2.

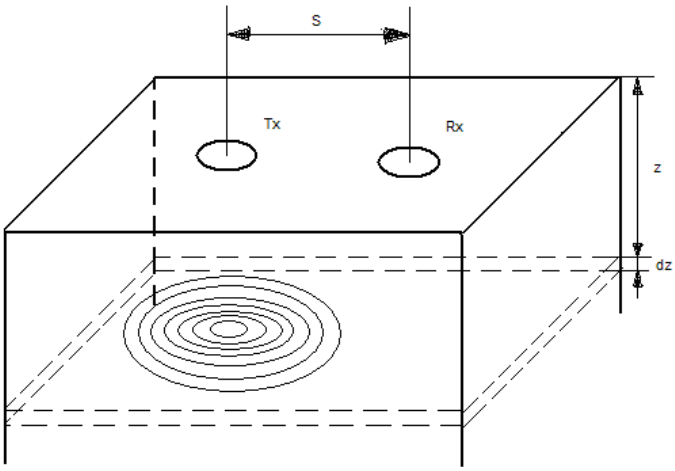


Fig. 2. The thin layer dz at the depth z

The depth plotted as fractions of s - distance between coils, is represented on $O_x$:

$$z = \frac{\text{depth}}{s} \qquad (3)$$

It can be built, so for the vertical polarization, the function $\phi_V(z)$ , which describes the relative contribution of the secondary magnetic field due to a thin layer at a depth z. . It is observed that the layer located at a depth of about 0.4s gives maximum contribution of secondary magnetic field, but that layer to a depth of 1.5s, yet contribute significantly.

In figure 3 is presented the function $\phi_V(z)$ for the vertical polarization.

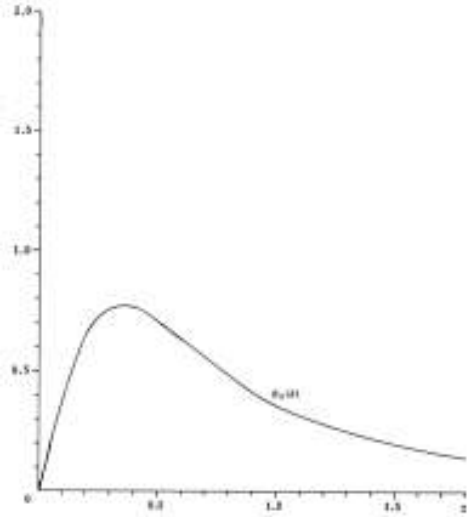

Fig. 3. Operation of the device in vertical polarization mode (VD)

It is interesting to note that in the neighborhood of the surface layer has a very small contribution to the secondary magnetic field and, therefore, this configuration is insensitive to changes in conductivity near the surface.

In figure 4 is presented the function $\phi_H(z)$ for the case when the transmitter and receiver operate in the operating mode to horizontal coplanar dipoles.

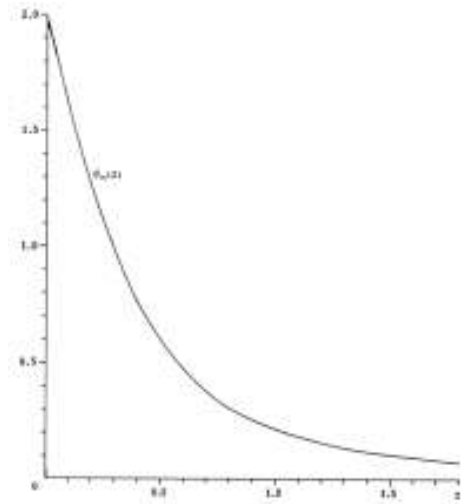

Fig. 4. Operation of the device in horizontal polarization mode (HD)

For comparison of the different ways to respond to layers at different depths, now are shown in the same coordinate system, both functions: vertical polarization (VD) and horizontal polarization (HD). In figure 5 are presented both functions: $\phi_V(z)$ and $\phi_H(z)$.

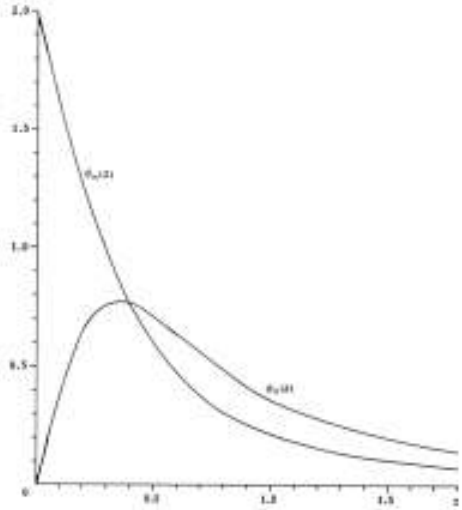

Fig. 5. Representation of both functions: $\phi_V(z)$ and $\phi_H(z)$
(to highlight how different the response of different layers)

It is noted that at depths slightly smaller than the distance between the coils, the signal measured by the device is about twice higher for vertical polarization to horizontal polarization case.

The horizontal dipole orientation, the instrument is more sensitive to soil layers in the vicinity. The vertical dipole orientation device is more sensitive to the deeper layers.

Thus, by performing measurements in both modes, it is possible to measure the increase or decrease in conductivity with depth.

## 4. ADVANTAGES AND DESADVANTAGES OF INDUCTIVE METHOD

### 4.1 Advantages of electromagnetic method.

The advantages of electromagnetic:

- Excellent conductivity resolution. Opening side swept volume of earth inductive technique is about the same as the depth. The result is that small changes in conductivity, for example, of the order of 5% or 10% are accurately measured.

A problem in the conventional method of measuring the resistivity was that this inhomogeneity located near the electrodes causes large errors.

Examining the current flow in a homogeneous space for inductive technique described here that, near the emitter current density is very high and we can expect that the presence of an inhomogeneous conductors are here to have a big effect. However, if the current density is high, the radius of the current loop is low and their distance from the receiver coil is large, so that the loops are tightly coupled with the receiver. Thus errors due to local conductivity variations are negligible.

- Current injection. Specific problems encountered with conventional current injection materials such as gravel, bedrock, snow and ice, etc. are not found in current injection instruments using induction.

- Quick and easy measurements. The classical method for each measurement, four electrodes are inserted into soil and measurement is relatively close to the space between the electrodes. Making repeated maneuvers presents numerous opportunities for breakage. These problems are avoided and an inductive magnetic measurement technique can be performed five to ten times faster using this technique.

### 4.2 Disadvantages of electromagnetic method.

As with all geophysical instruments the use of inductive technique has several disadvantages as follows:

- Limited dynamic range (1-1000 mS / m). For low values of conductivity land, obtaining of sufficient soil to produce a detectable magnetic field coil reception is difficult. On the other hand, if high values of soil conductivity, the EM measurements are no longer linearly proportional to the conductivity of the soil.

- Establish and maintain the zero of the instrument. In this case, a region of the ground looking very resistant to accurately measure its conductivity using conventional techniques, and to adjust to zero the instrument. Ideally, when zero adjustment tool, it should be suspended in space.

It requires zero setting of the instrument to be accurately maintained at zero for long periods and temperature variations encountered during geophysical measurements in different areas of the Earth. Zero can be calibrated with an error of up to ± 0.2 mS per meter. Such an error would be negligible in the normal range of soil conductivity. However, if the measurements are carried out on a very strong field, the error may become significant.

## 5. PAPER MOISTURE MEASUREMENTS

The operating principle of non-contact method is: a transmitting coil Tx supplied with alternating current at an audio frequency is placed on the paper comes out of the heater. A reception coil Rx is located at a short distance, s, away from the Tx coil. The magnetic field varies in time and emission Tx coil induces circular currents of very low intensity in wet paper. These currents generate a secondary magnetic field Hs , which is sensed by the receiver Rx coil together with the magnetic field Hp.

The ratio of the secondary magnetic field Hs and Hp primary magnetic field (Hs \ Hp) is directly proportional to the conductivity of the paper. Thus it is possible to build a device to measure the conductivity of paper contactless electromagnetic technique.

In the figure 7 is presented the device to measure contactless the humidity (by conductivity) of paper. The inter-coil distance s=0,2 m and maximum sounding deep 0,3 m.

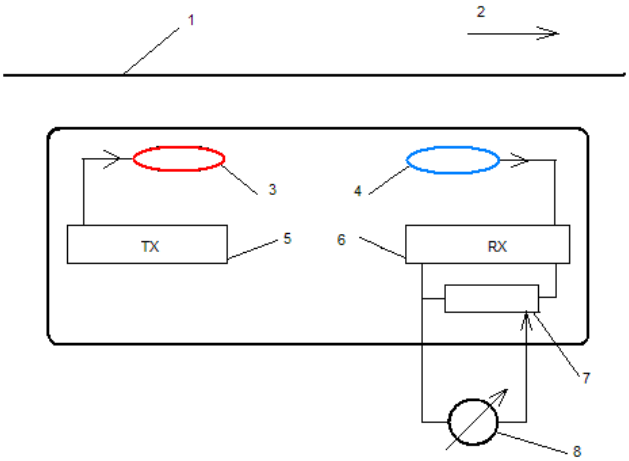


Fig. 7. Device to measure the humidity of paper, 1) paper, 2) moving paper direction, 3) Tx coil, 4)Rx coil, 5) transmitter, 6) receiver, 7) potentiometer, 8) analog measurement instrument

In figure 8 is presented the end of the production process.

At the end of the production process, the paper is stored in rolls. An important condition of the paper quality is the reduced moisture content. This is obtained with an electric heater.

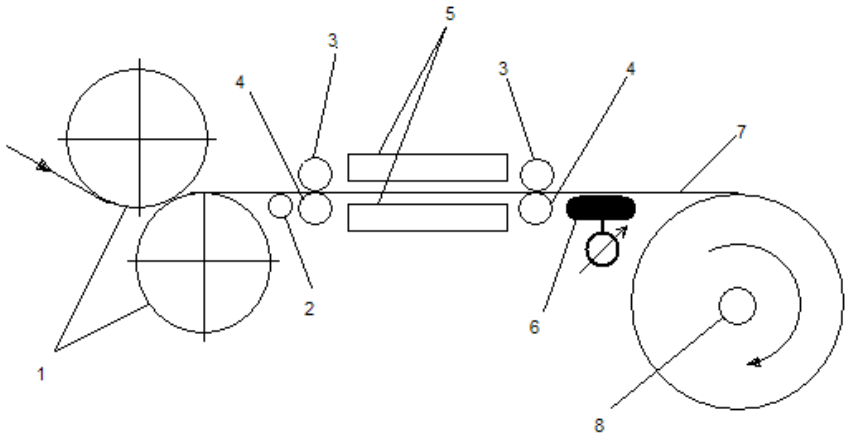


Fig. 8. The end of the paper production process. 1) press of dryer cylinders, 2) rolling guide, 3) roll top, 4) lower roller, 5) heater, 6) humidity measurement device, 7) paper, 8) spooling machine.

The heating current is selected according the indications of the humidity measurement device. This device allows the moisture measurement before the spooling machine. So, is obtained the optimum humidity for the stored paper.

## 6. CONCLUSIONS

This technique for measuring humidity by electromagnetic induction, using Very Low Frequency (VLF), is a non-intrusive, non-destructive sampling method. The measurements can be done quickly and are not expensive.

## 7. REFERENCES

[1] **de Jong E., A. K. Ballantyne, D. R. Cameron and D. L. Read, "**Measurement of Apparent Electrical Conductivity of Soils by an Electromagnetic Induction Probe to Aid Salinity Surveys**",** Soil Sci. Soc. Am. J. 43:810-812, 1979

[2] **Diaz, L. and J. Herrero,** "Salinity Estimates in Irrigated Soils Using Electromagnetic Induction**",** Soil Sci. 154(2): 151-157, 1992.

[3] **Doolitlle JA, Sudduth KA, Kitchen NR & Indorante SJ, "**Estimating Depths to Clay Pans Using Electromagnetic Induction Methods**"**, Journal of Soil and Water Conservation 49, 572-575, 1994.

[4] **J.D., N.A. Manteghi, P.J. Shouse and W.J. Alves,** "Soil Electrical Conductivity and Soil Salinity**"** New Formulations and Calibrations, Rhoades, Soil Sci. Soc. Am. J. 53:433-439, 1989.

[5] **Johnston M. A., M. J. Savage, J. H. Moolman and H. M. du Plessis, "**Evaluation of Calibration Methods for Interpreting Soil Salinity from Electromagnetic Induction Measurements**",** Soil Sci. Soc. Am. J., 61:1627-1633, 1997.

[6] **Lesch, S. M., J. Herrero and J. D. Rhoades, "**Monitoring for Temporal Changes in Soil Salinity Using Electromagnetic Induction Techniques**",** Soil Sci. Soc. Am. J. 62:232-242, 1998.

[7] **Sudduth KA, Kitchen NR, Hughes DF & Drummond ST, "**Electromagnetic Induction Sensing as an Indicator of Productivity on Claypan Soils**",** Proceedings of the Second International Conference on Site Specific Management for Agricultural Systems, (Eds. Probert, P.G., Rust, R.I.H. & Larson, W.E.). pp 671-681, 1995.

[8] **Wollenhaupt N. C., J. L. Richardson, J. E. Foss and E. C. Doll.,** "A Rapid Method for Estimating Weighted Soil Salinity from Apparent Soil Electrical Conductivity Measured with an Aboveground Electromagnetic Induction Meter", Can J. Soil Sci. 66:315-321, 1986.