CONSIDERATIONS ON ELECTROMAGNETIC HUMIDITY MEASUREMENT IN SIMPLE MASONRY WALLS

Drd. Fiz. Tudor BURLAN-ROTAR,
Polytechnic University of Bucharest, tudor.burlan@yahoo.com,
Prof. Univ. Emerit Dr. Ing. Constantin D. STANESCU,
Polytechnic University of Bucharest, prof_cstanescu@yahoo.com,
Drd. Prof. Eng. Liliana CAINICEANU,
Polytechnic University of Bucharest, ;lili_cainiceanu@yahoo.com

ABSTRACT: Humidity measurement in thick walls indicate under what conditions is exploited a building. Any type of moisture walls, superficial or deep, give information about possible cracks or infiltration of water. The electromagnetic techniques for measuring soil humidity (by resistivity) has been known for a long time. It can be used to measure walls moisture. Conductivity is preferable in inductive techniques, as instrumentation readings are generally directly proportional to conductivity and inversely proportional to resistivity.

The operating principle of this method is: a Tx coil transmitter, supplied with alternatingcurrent at an audio frequency, is placed on the wall. An Rx coil receiver is located at a short distance, s, (on the wall) away from the Tx coil. The magnetic field varies in time and the Tx coil induces very small currents in the wall. These currents generate a secondary magnetic field, Hs, which is sensed by the Rx receiver coil, together, with primary magnetic field Hp. The ratio of the secondary field, Hs, to the primary magnetic field, Hp, (Hs/Hp) is directly proportional to wall conductivity. Measuring this ratio, it is possible to construct a device which measures the wall conductivity by contactless, direct-reading electromagnetic technique (linear meter).

This technique for measuring conductivity by electromagnetic induction, using Very Low Frequency (VLF), is a non-intrusive, non-destructive sampling method. The measurements can be done quickly and are not expensive.

Key words: electromagnetic, wall humidity, conductivity, contactless.

1. INTRODUCTION

This method is useful because it allows moisture measurement in uniform or non-uniform thick walls.

The wall assumes humidity control, which in turn determine the electrical conductivity of the wall.

The electromagnetic techniques for measuring soil humidity (by resistivity) has been known for a long time. It can be used to measure moisture in thick walls. Conductivity is preferable in inductive techniques, as instrumentation readings are generally directly proportional to conductivity and inversely proportional to resistivity.

2. ELECTROMAGNETIC METHOD FOR MEASURING SOIL RESISTIVITY

Figure 1 presents the principle of electromagnetic method for measuring soil conductivity.

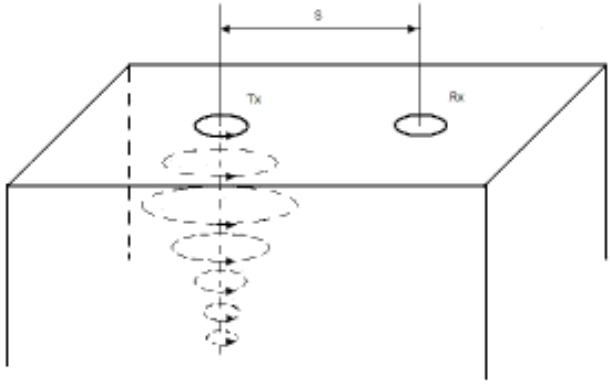

Fig. 1: Principle of electromagnetic soil conductivity measurement

The operating principle of this method is:

A Tx transmitter coil supplied with alternating current at a frequency audio is placed on the ground.

A Rx receiver coil is located at a distance s from Tx coil.

The magnetic field varies in time and the Tx coil induces very small currents in the ground. These currents generate a secondary magnetic field, Hs, which is sensed by the Rx receiver coil, together, with primary magnetic field Hp.

The current induced in the coil receiver Rx is directly proportional to the conductivity of the soil:

$$\frac{H_s}{H_p} \cong \frac{i\omega\mu_0\sigma S^2}{4} \qquad (1)$$

where :

H_s = secondary magnetic field at Rx coil; μ_0 = permeability of vacuum;

H_p = primary magnetic field at Rx coil; σ = soil conductivity;

ω = $2\pi f$ (pulsation); S = distance between coils;

f = frequency; i = $\sqrt{-1}$

Since the ratio of the secondary magnetic field and the primary magnetic field is directly proportional to the soil conductivity, can write apparent conductivity indicated by the instrument as defined by the equation:

$$\sigma_a = \frac{4}{\omega\mu_0 S^2}\left(\frac{H_s}{H_p}\right) \qquad (2)$$

The unit for conductivity is Siemens per meter or, more conveniently, milli Siemens per meter (mS / m).

3. CHARACTERISTICS OF THE DEVICE ACCORDING TO THE TYPE OF POLARIZATION

Table 1 shows the penetration depth depending on the type of polarization and the distance between the coils.

Table 1: the penetration depth depending on the type of polarization and the distance between the coils.

Distance between coils (meters)	The penetration depth (meters)	
	Horizontal dipole (HD)	Vertical dipole (VD)
0,2	0,15	0,3
0,4	0,3	0,6
1	0,75	1,5

Consider the following initial conditions:

For a homogeneous or stratified horizontal ground current flow is entirely horizontal. In addition, the current flow at any point in the ground is independent of current flow at any point and the magnetic coupling between the current loops are negligible. Accordingly the depth of penetration is limited only by the distance between the coils.

The response of the device as a function of depth (in a homogeneous halfspace):

Whether on a homogeneous halfspace surface which are located the Tx and Rx coils at distance s. Consider a thin layer dz at a depth z.

The thin layer dz at a depth z is presented in figure 2.

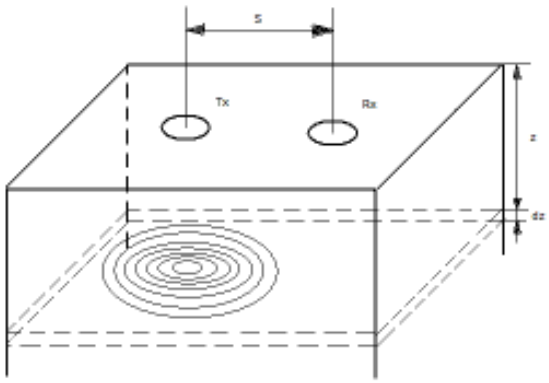

Fig. 2. The thin layer dz at the depth z

The depth plotted as fractions of s - distance between coils, is represented on O_x:

$$z = \frac{\text{depth}}{s} \qquad (3)$$

It can be built, so for the vertical polarization, the function $\phi_V(z)$, which describes the relative contribution of the secondary magnetic field due to a thin layer at a depth z.

It is observed that the layer located at a depth of about 0.4s gives maximum contribution of secondary magnetic field, but that layer to a depth of 1.5s, yet contribute significantly.

In figure 3 is presented the function $\phi_V(z)$ for the vertical polarization.

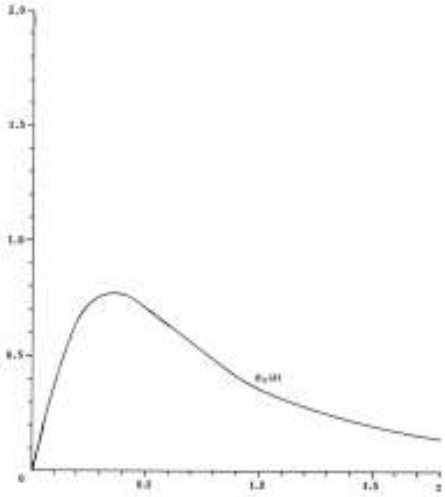

Fig. 3. Operation of the device in vertical polarization mode (VD)

It is interesting to note that in the neighborhood of the surface layer has a very small contribution to the secondary magnetic field and, therefore, this configuration is insensitive to changes in conductivity near the surface.

In figure 4 is presented the function $\phi_H(z)$ for the case when the transmitter and receiver operate in the operating mode to horizontal coplanar dipoles.

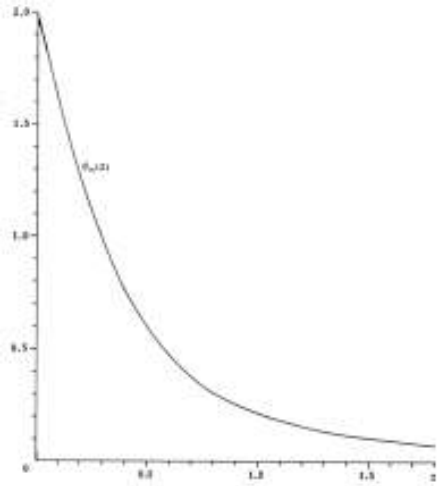

Fig. 4. Operation of the device in horizontal polarization mode (HD)

For comparison of the different ways to respond to layers at different depths, now are shown in the same coordinate system, both functions: vertical polarization (VD) and horizontal polarization (HD).

In figure 5 are presented both functions: $\phi_V(z)$ and $\phi_H(z)$.

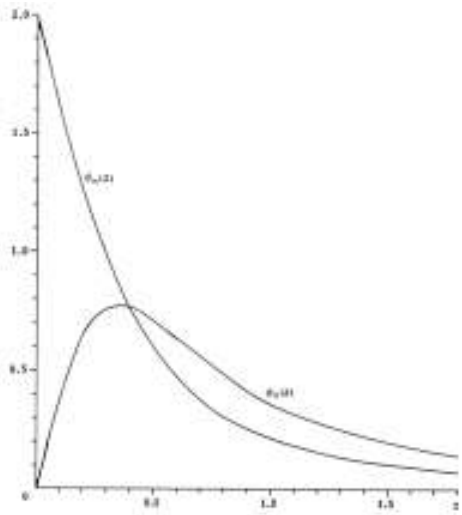

Fig. 5. Representation of both functions: $\phi_V(z)$ and $\phi_H(z)$
(to highlight how different the response of different layers)

It is noted that at depths slightly smaller than the distance between the coils, the signal measured by the device is about twice higher for vertical polarization to horizontal polarization case.

The horizontal dipole orientation, the instrument is more sensitive to soil layers in the vicinity. The vertical dipole orientation device is more sensitive to the deeper layers.

Thus, by performing measurements in both modes, it is possible to measure the increase or decrease in conductivity with depth.

4. MEASUREMENTS

The application of electromagnetic techniques for measuring soil resistivity or conductivity has been known for a long time. Conductivity is preferable in inductive techniques, as instrumentation readings are generally directly proportional to conductivity and inversely proportional to resistivity.

The operating principle of this method is: a Tx coil transmitter, supplied with alternating current at an audio frequency, is placed on the wall. An Rx coil receiver is located at a short distance, s, (on the wall) away from the Tx coil. The magnetic field varies in time and the Tx coil induces very small currents in the wall. These currents generate a secondary magnetic field, Hs, which is sensed by the Rx receiver coil, together, with primary magnetic field Hp.

The ratio of the secondary field, Hs, to the primary magnetic field, Hp, (Hs/Hp) is directly proportional to wall conductivity. Measuring this ratio, it is possible to construct a device which measures the terrain conductivity by contactless, direct-reading electromagnetic technique (linear meter).

This technique for measuring conductivity by electromagnetic induction, using Very Low Frequency (VLF), is a non-intrusive, non-destructive sampling method. The measurements can be done quickly and are not expensive.

The differences in conductivity of subsurface layers may indicate stratified layers or voids that could be of interest.

The configuration has the distance between coils 1m, the maximum sounding deep is 1,5m at a frequency of 10-20kHz. The transmitter power supply is a small 9V baterry.

In figure 6 is presented the humidity device configuration for s=0,4 m and maximum sounding deep 0,6 m.

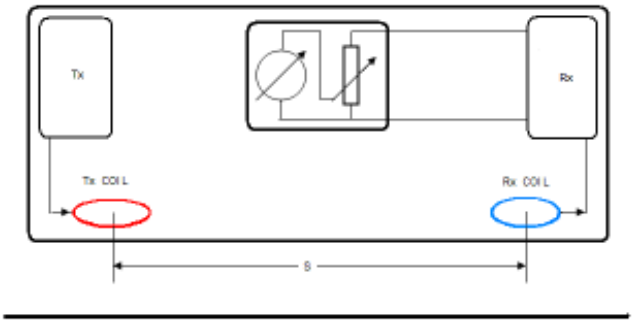

Fig. 6. Configuration for s=0,4 m and maximum sounding deep 0,6 m.

The coils are air-cored for bouth: transmitter and receiver. These coils are in fact magnetic antennas.

5. CONCLUSIONS

Construction features of the device are adapted to the needs of non-destructive determination of moisture masonry at fixed points or larger areas.

This method is useful because it allows moisture measurement in uniform or non-uniform thick walls.

Using this method we can determine, on the one hand, structural defects but no apparent of the building, existence of deep dampnees, but no apparent and on the other hand , the presence of surface humidity and its lack in depth of the construction.

The device allows effective control of dam walls, the discovery of cracks by presence of infiltration of water.

The device also enables very accurate assessment of the state of old buildings, for example, presence of track metal reinforcements, wooden beams and even the state of the beams considering the wood humidity.

6. REFERENCES

[1] de Jong E., A. K. Ballantyne, D. R. Cameron and D. L. Read, "Measurement of Apparent Electrical Conductivity of Soils by an Electromagnetic Induction Probe to Aid Salinity Surveys**",** Soil Sci. Soc. Am. J. 43:810-812, 1979

[2] Diaz, L. and J. Herrero, "Salinity Estimates in Irrigated Soils Using Electromagnetic Induction**",** Soil Sci. 154(2): 151-157, 1992.

[3] Doolitlle JA, Sudduth KA, Kitchen NR & Indorante SJ, "Estimating Depths to Clay Pans Using Electromagnetic Induction Methods**"**, Journal of Soil and Water Conservation 49, 572-575, 1994.
[4] J.D., N.A. Manteghi, P.J. Shouse and W.J. Alves, *"*Soil Electrical Conductivity and Soil Salinity**"** New Formulations and Calibrations, Rhoades, Soil Sci. Soc. Am. J. 53:433-439, 1989.
[5] Johnston M. A., M. J. Savage, J. H. Moolman and H. M. du Plessis, "Evaluation of Calibration Methods for Interpreting Soil Salinity from Electromagnetic Induction Measurements**",** Soil Sci. Soc. Am. J., 61:1627-1633, 1997.
[6] Lesch, S. M., J. Herrero and J. D. Rhoades, "Monitoring for Temporal Changes in Soil Salinity Using Electromagnetic Induction Techniques**",** Soil Sci. Soc. Am. J. 62:232-242, 1998.
]7] Sudduth KA, Kitchen NR, Hughes DF & Drummond ST, "Electromagnetic Induction Sensing as an Indicator of Productivity on Claypan Soils**",** Proceedings of the Second International Conference on Site Specific Management for Agricultural Systems, (Eds. Probert, P.G., Rust, R.I.H. & Larson, W.E.). pp 671-681, 1995.
[8] Theodor Nicolau, Ionel Apostol, "Umidimetre *electronice",* Editura tehnica, Bucuresti – 1973.
[9] Wollenhaupt N. C., J. L. Richardson, J. E. Foss and E. C. Doll., "A Rapid Method for Estimating Weighted Soil Salinity from Apparent Soil Electrical Conductivity Measured with an Aboveground Electromagnetic Induction Meter", Can J. Soil Sci. 66:315-321, 1986.